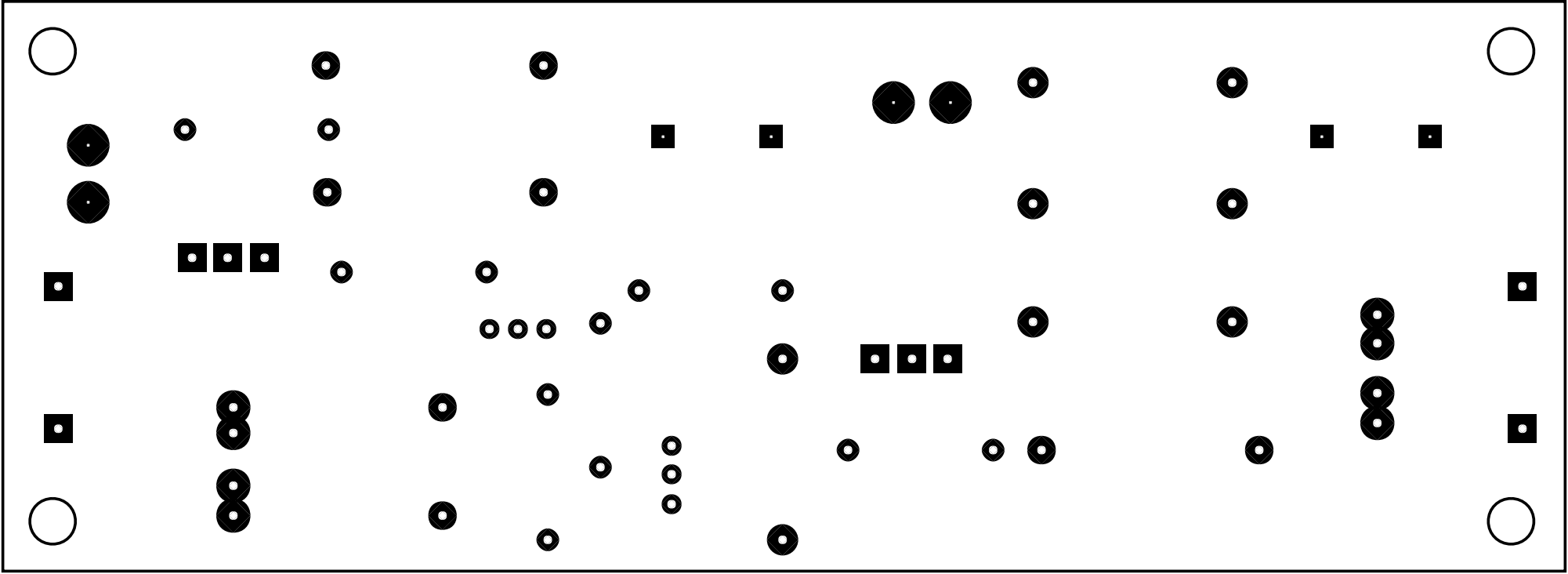

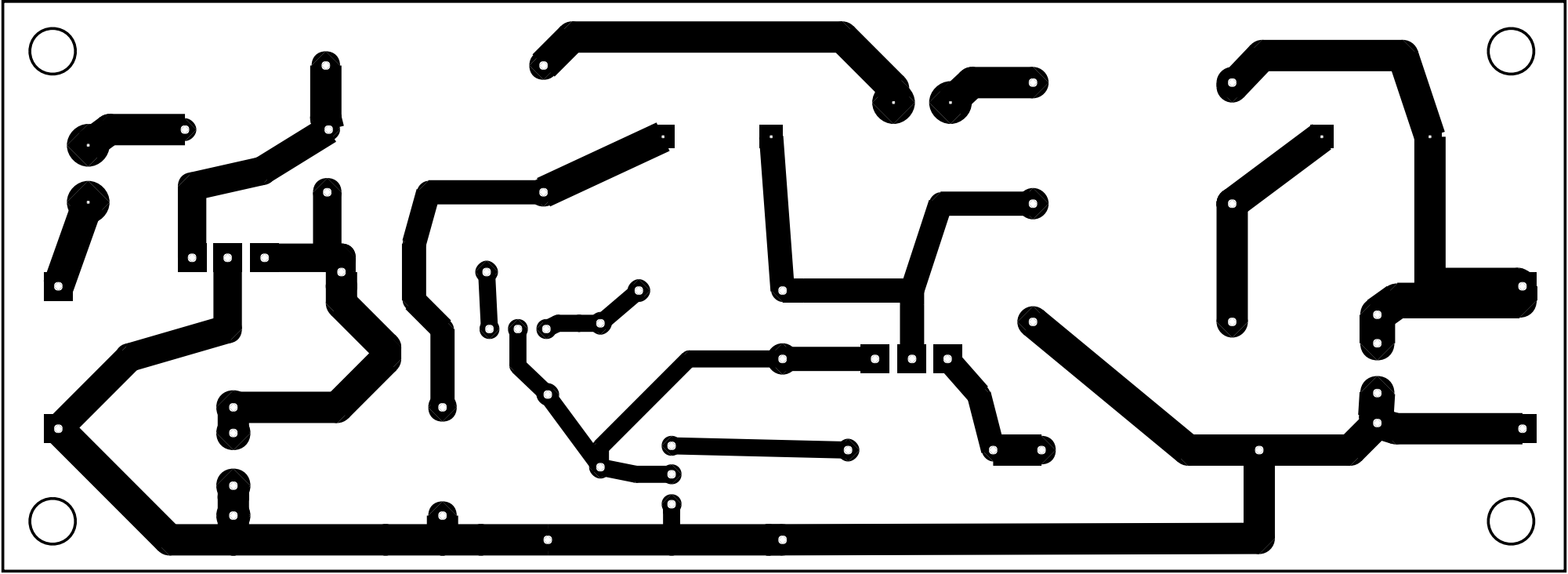

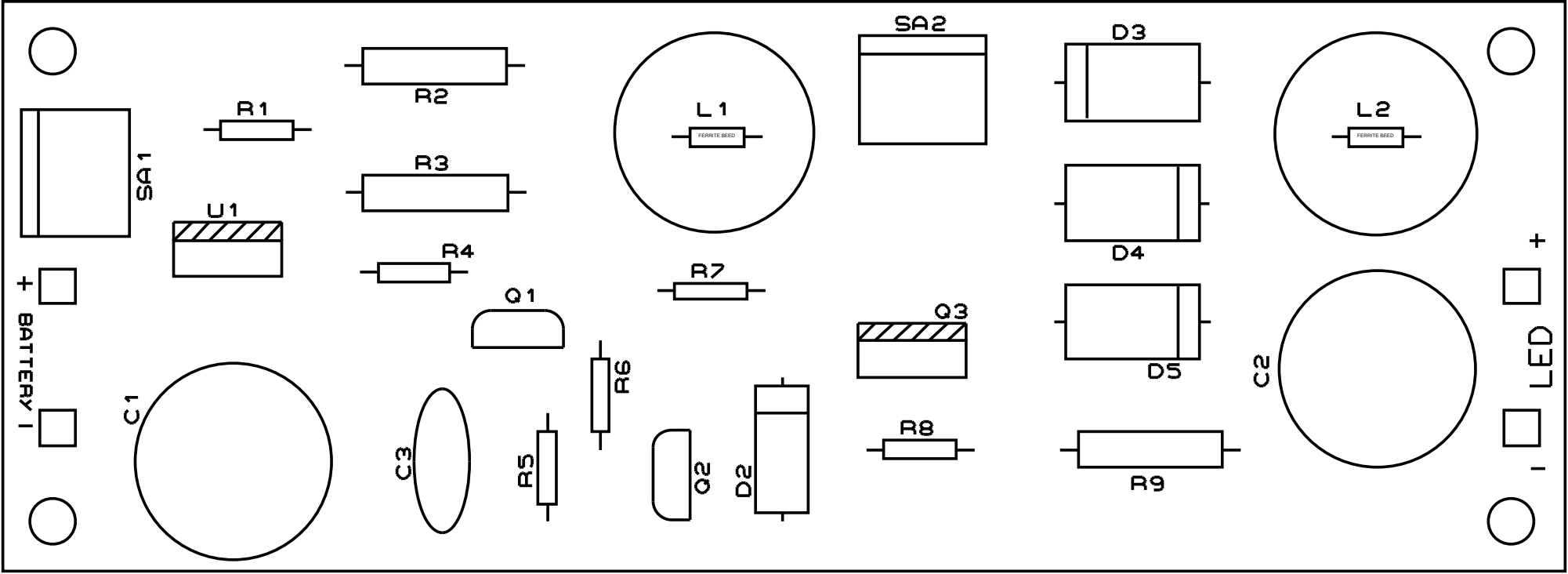
SA2
D3
R2
L1
FERRITE BEED
L2
FERRITE BEED
R1
SA1
R3
U1
D4
R4
R7
+
+
Q1
Q3
D5
BATTERY
R6
C2
LED
C1
C3
R5
Q2
D2
R8
R9
-
-